EURAMAX SOLUTIONS

uPVC WINDOW

STEP-BY-STEP ILLUSTRATED ASSEMBLY INSTRUCTIONS

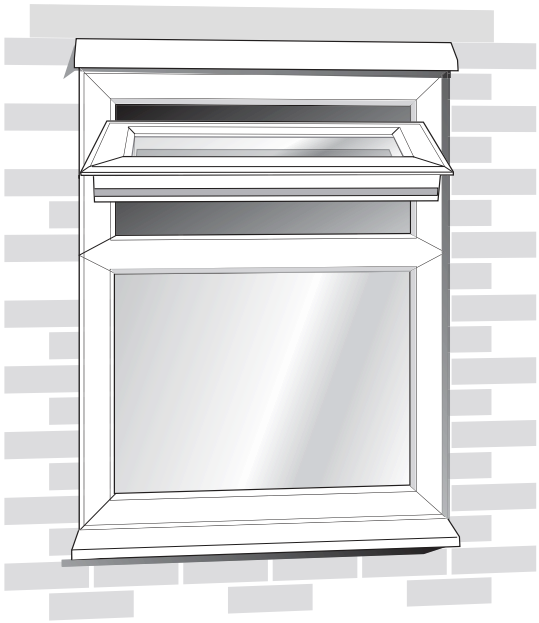

IMPORTANT NOTE TO THE INSTALLER

This installation may be required to comply with local building regulations.
Please leave these instructions with the householder after installation has been satisfactorily completed.

Before commencing any work, carefully check all parts to ensure they are complete and free from marks or scratches on all finished surfaces. Read through these instructions to familiarise yourself with the installation procedure. Make sure that you have all the necessary tools and any additional items required e.g. sealant and additional fixings not included in the packs. All nominal dimensions are in mm.
IF IN DOUBT, SEEK EXPERT ADVICE.

TOOLS REQUIRED

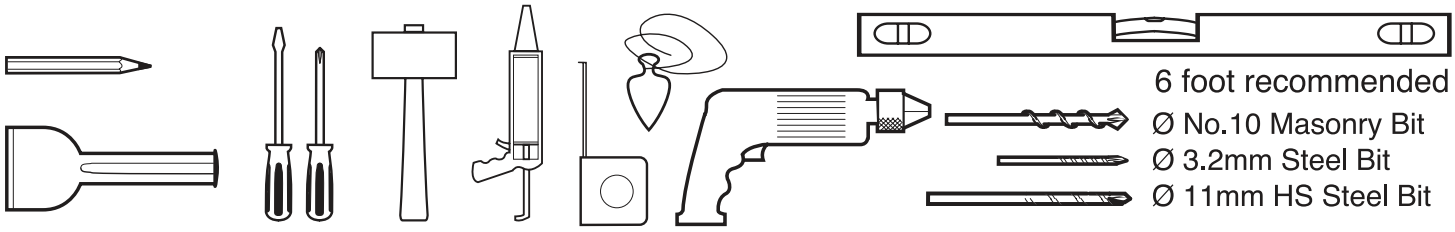

Guarantee Terms and Conditions

The Manufacturers policy is one of continuous development and improvement and accordingly we reserve the right to alter specification without prior notice. The utmost care has been taken in the manufacture of this product to ensure it gives complete satisfaction. To the best of our knowledge this product was in perfect condition when it left our factory. You are recommended to examine it before installation and check quality, accuracy of the components and quantity of the contents. Customers should note that claims for damage to glass, finish or shortages must be submitted to the vendor before installation. The manufacturer also reserves the right to disallow claims once the product has been installed. Failure to follow the recommendations set out in these instructions or to install in a manner not approved by the manufacturer may result in all or part of the product guarantee being null or void. This product is guaranteed by the manufacturer for a period of 10 years from the date of purchase and no other proposal or statement by any other party will supersede or complement this offer. Should any part of it become defective due to faulty manufacture or materials, it will be replaced free of charge (supply only). Any parts supplied will have a guarantee term for the remaining period of the initial product guarantee stated previously. The product is not guaranteed against conditions of use or misuse. This guarantee does not cover glass breakage however caused, or any fault arising from incorrect installation. Any replacement parts supplied, including assemblies, or completed products, are for DIY installation and no claim can be accepted for any costs however incurred for the installation of the replacement items. This guarantee is offered as an extra benefit and is in addition to and does not affect your statutory rights. Please retain your receipt as proof of purchase.

WINDOW FRAME ASSEMBLY

Item	Description	Qty
1	VENTED HEAD	1
2	END CAP, for head, right hand	1
3	END CAP, for head, left hand	1
4	WINDOW FRAME ASSEMBLY	1
5	SILL*	1
6	END CAP for sill, right hand*	1
7	END CAP for sill, left hand*	1

(*'SILL' and 'END CAPs for sill', items 5, 6 & 7, purchased separately)

For convenience the fittings are supplied in packs as follows:

Pack 1*	contains	Qty
8	HANDLE	1
9	HANDLE FIXING SCREW, (*may need to be purchased separately)	2

Pack 2	contains	Qty
	HEAD END CAP, items 2, 3	2
	SILL END CAP, items 6, 7	2

Pack 3	contains	Qty
10	FLAT PACKER, 2mm thick, black	8
11	FLAT PACKER, 3mm thick, white	8
12	FIXING CLEAT* (*packs for larger windows contain 10)	8*

Pack 4	contains	Qty
13	VENT COVER, outer	1
14	VENT COVER, inner	1
15	SCREW, outer vent cover	3
16	SCREW, inner vent cover	3
17	SCREW COVER CAPS, inner vent cover	3

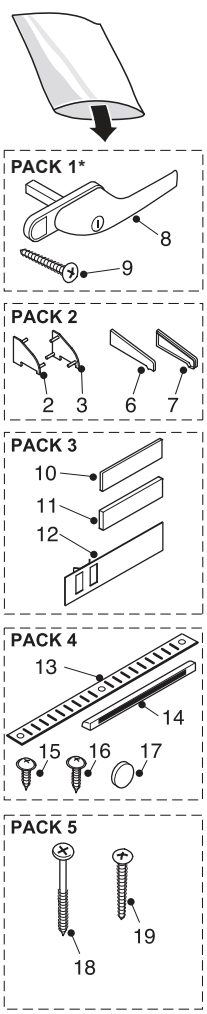

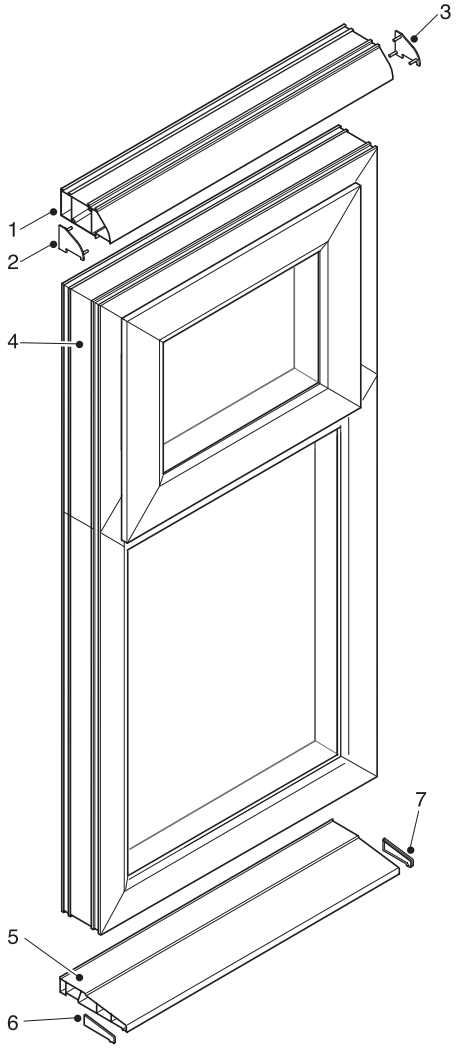

Pack 5	contains	Qty
18	SCREW, 55mm element	3
19	SCREW, 4.3 x 40mm	3

If an existing aperture is slightly larger than the available window frame size, 20mm extension profiles may be **purchased** separately.

Before assembling the components it should be noted that the uPVC window always opens OUTWARDS.

Two people may be required to lift the frame assembly into place.

1 PREPARING THE OPENING

It is important that a suitable lintel is fitted above the opening.

If an opening is to be formed, cut brickwork with a 230mm diameter angle grinder (available from hire shops) and remove bricks using a cold chisel and hammer. Fit a damp proof membrane along the bottom of the aperture.

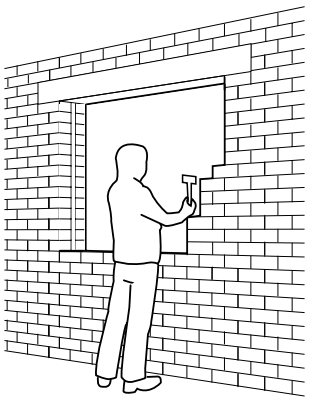

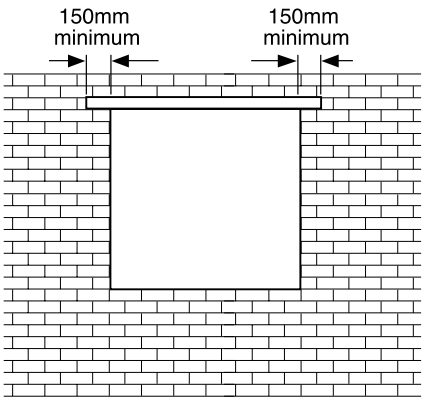

2 APPLYING SEALANT AND SCREWS

(a) Before fitting the vented head (1), position the outer vent covers to the outside of the head over the pre-drilled slots and fix with the smaller self-tapping screws (15).

(b) Apply a bead of a suitable grade of silicone sealant along the inner raised edges on the top rail of the frame (4) and position the head onto the frame.

(c) Measure a distance of approximately 50mm from each end of the head and mark with a pencil. Drill through the head and the frame with a 3.2mm drill at the marked positions and fix with three 55mm element screws (18).

(d) Apply a bead of silicone sealant to each end of the vented head (just the length of the end cap), then push the end caps (2, 3) into place so that the locating pegs fit tightly into the the head.

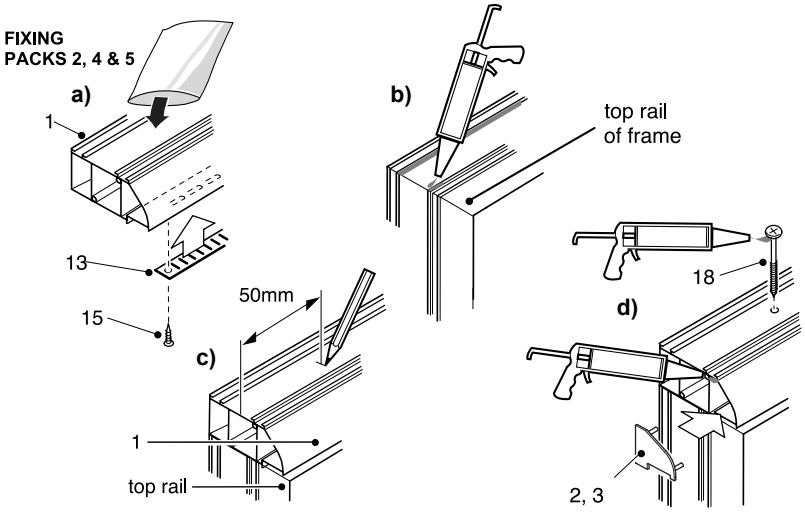

3 APPLYING SEALANT AND SCREWS pt.2

(a) Apply a bead of an all-purpose silicone sealant along the inner raised edges on the bottom rail of the frame (taking care not to block the drainage holes) and position the sill (5) onto the frame.

(b) Measure a distance of approximately 50mm from each end of the sill and mark with a pencil.

(c) Drill through the sill and the frame with a 3.2mm drill at the marked positions and fix with two 4.3 x 40mm screws (19).

Coat the ends of the sill with silicone sealant and push the end caps (6, 7) into position.

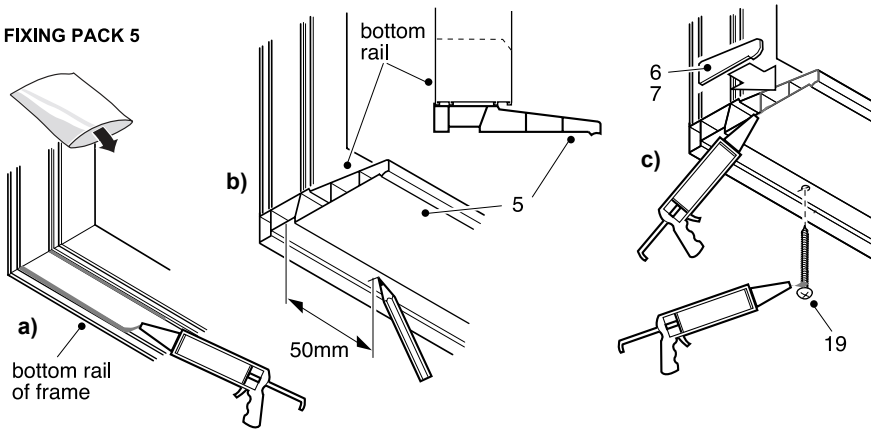

To ensure that the window operates smoothly it is vital that the frame is installed correctly. The frame MUST be fitted plumb and square. Check with a spirit level of adequate length, by measuring the frame corner to corner diagonally to achieve an equal measurement, or by using a square. It is also recommended that the window is checked for bowing by using a long straight edge.
Ensure that the frame is not distorted when tightening the wall fixings by regularly measuring the window horizontally. Use packers as required to prevent bowing. It is recommended that during frame installation ALL aspects are double checked prior to the final installation as the operation of the window and lock will be affected if the frame is fitted incorrectly.

4 INSTALLING THE uPVC FRAME

a) Ensure the cleats (12) are fitted to the outer frame before lifting into the aperture. Locate the cleat lugs into the raised edges on the frame rails and rotate the cleat so that it 'clicks' into place and is locked securely. Generally all four sides of the frame must be secured as follows:-

- Corner fixings must be between 150mm & 200mm from an external corner (X).
- No fixings shall be less than 150mm from the centre line of a mullion or transom.
- Intermediate fixings shall be at centres no greater than 600mm.
- There should be a minimum of 2 fixings on each jamb.

b) Push the frame (4) firmly into the aperture, ensuring an equal gap around all four sides

c) Place equally spaced flat packers (10, 11) all around the frame to ensure the window is level, square and plumb.

d) Once the window is in the correct position, secure the frame into the opening. Drill through the cleats into the wall.

e) Fix the frame using suitable fittings applicable to the type of wall construction. Apply a bead of all-purpose silicone sealant under each screw head before tightening, taking care not to distort the frame when tightening (check the frame width regularly to ensure that the frame is even).

Re-check the installation as in c) before continuing.

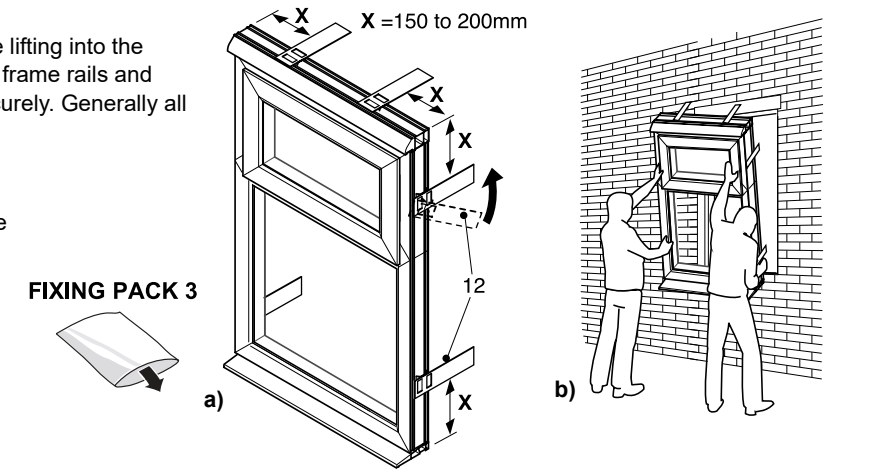

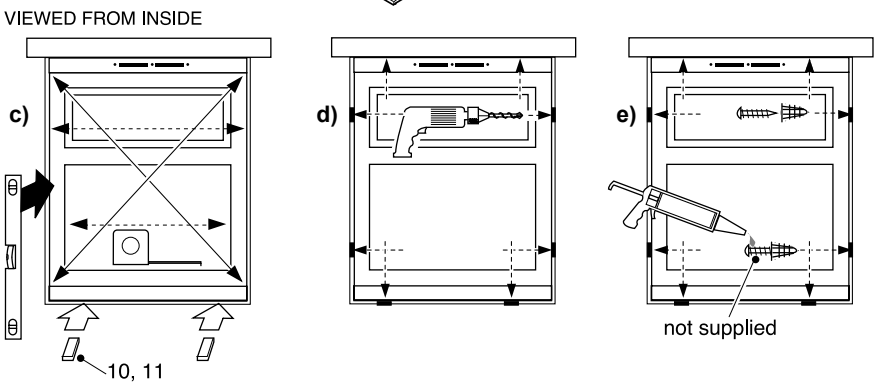

5 FINAL SEALANT

Fill any gaps between masonry and the frame; if the gaps are too wide, a proprietary expanded P.U. filler or foam rod may be used, prior to finishing with an all-purpose silicone sealant.

Fix the inner vent control to the inside of the head using the larger self-tapping screws (16) and screw cover caps (17) provided. The vent control may be fitted facing either upwards or downwards, depending on personal preference.

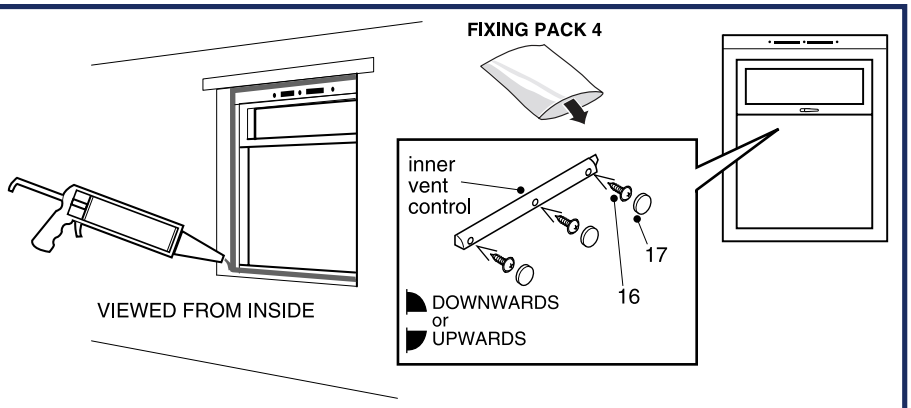

6 FITTING THE LOCKING HANDLE

Fit the lock handle (8) to the opening window. Prise out the plug from the end of the base plate. Insert the square bar into the lock on the inside of the opening window and line up the screw holes. Fix the open end of the base plate with one of the fixing screws (9) provided.

Turn the handle to expose the second fixing hole. Insert the second fixing screw (9) and tighten both screws before replacing the plug. Check the window operation.

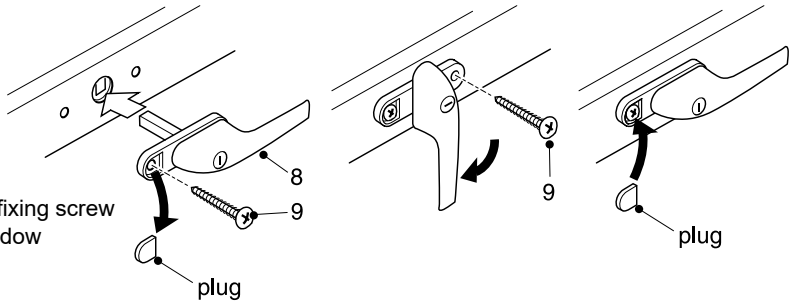

EXTENSION PROFILE (separate purchase)

The 20mm extension profile can be used to increase the outer frame width and/or height by increments of 20mm.

Extension profiles when fitted to either the width or height

a. Measure the outer frame width or height where the extension profile is to be fitted.
b. Measure and mark with a pencil the extension profile to the required length.
c. Cut the extension profile to the correct length.
d. Line up the locating points of the extension profile with the outer frame.
e. Tap the extension profile into the outer frame until it 'clicks' into place and is securely located, ensuring that the extension profile finishes flush with the outer frame.

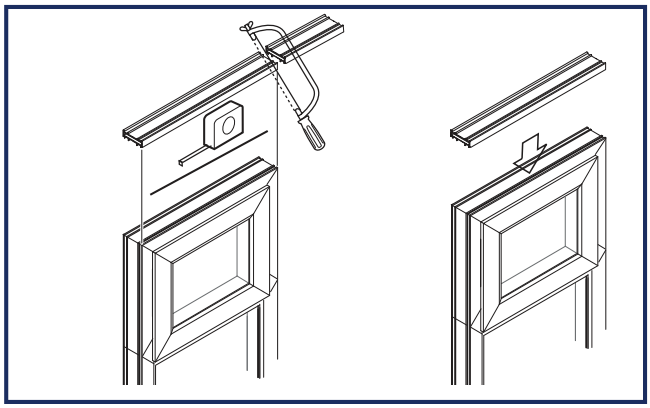

Extension profiles when fitted to width and height

a. Before you begin, determine which extension profile(s) are to run the full width or height.The extension profile(s) that are to run the full width or height need to be 20mm longer for each extension profile that will butt up to it.
b. Measure the outer frame width or height where the extension profile is to be fitted.
c. Measure and mark with a pencil the extension profile to the required length.
d. Cut the extension profile to the correct length. Where an extension profile overlaps the other, the locating points need to be removed to enable the other extension profile(s) to butt up to it, to ensure there is a flush finish. Apply a coat of silicone sealant to the cut face where it fits against the other extension profile(s).
e. Tap the extension profile into the outer frame until it 'clicks' into place and is securely located, ensuring that the extension profile(s) will be flush with the outer frame.

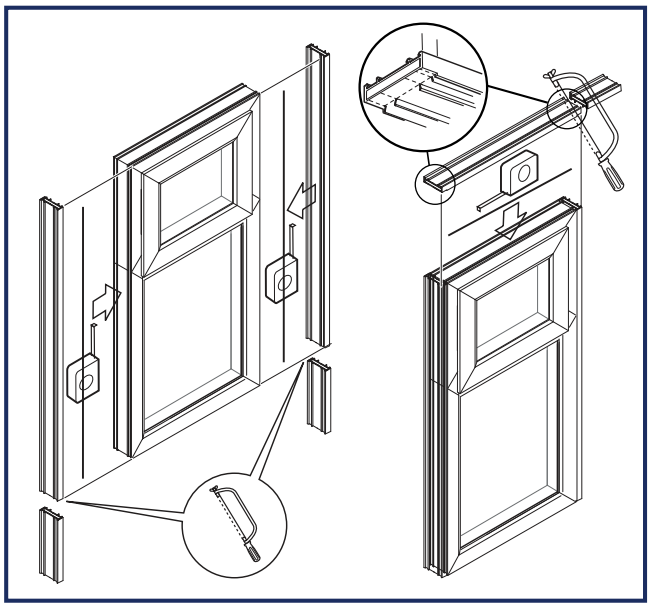

CARE AND MAINTENANCE OF YOUR uPVC WINDOW

Cleaning and Maintenance

When installation has been completed, initial cleaning down should take place. Remove any mastic with white spirit and wash down with a mild detergent mix. The surfaces should be regularly cleaned with soap or mild detergent and water. After cleaning, surfaces should be washed down with clean water and dried. At suitable intervals during the service life of the window, any component parts should be lightly oiled.