Bath Panel Installation Instructions

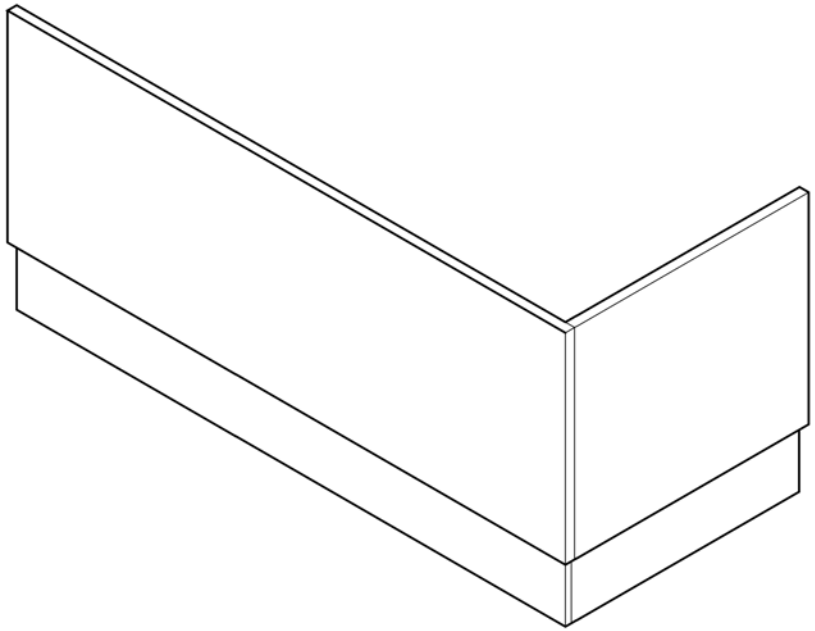

Please note: Images are for illustration purposes only

Please read carefully before attempting to install the panel. This leaflet contains aftercare instructions, which must be made available to the end user.

The following is a series of guidelines to aid the installation process of this product. They have been developed in order to cope with the majority of installations. It is possible that due to the type of bath or particular conditions on site that they are not suitable for your installation. Please read the instructions carefully and in case of difficulty a suitably qualified person should be consulted. The supplier cannot be held responsible for faults or damage caused as a result of the installation process. Please check the panel before fitting as damage claims cannot be made after it is installed.

GENERAL SAFETY INSTRUCTIONS

REMEMBER

- Take care when using electrical appliances near water – a residual current device (RCD) is recommended.
- Use eye protection when drilling.
- Check for any hidden pipes or cables.
- When working near a basin or bath insert the plug into the waste, this will help you avoid losing small parts. Also take care not to drop accessories or tools onto the bath or basin, use a towel or bathmat to protect delicate surfaces.

IDENTIFICATION OF PARTS

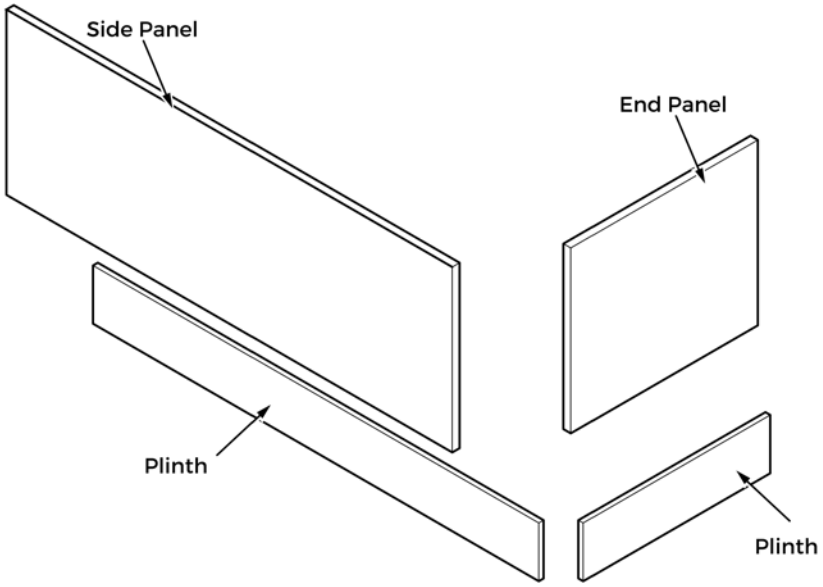

Softwood Strip Positioning

The softwood strips need to be set back from the rim of the bath to allow for the thickness of the panel. You may also need to allow for the thickness of any material that secures the panel to the softwood strips. (eg. Velcro). Panel thickness is 18mm, and you should allow at least 2-3mm more if using Velcro.

IMPORTIANT NOTE- Velcro should only be used in addition to a fixing method requiring a tool to gain access to the area behind the bath panel.

GENERAL CLEANING & PRODUCT AFTERCARE

This furniture is made of wood, and has a water resistant finish. It should not be left wet. The quality of the finish is best maintained if it is wiped with a dry cloth after use. It should only be cleaned using a soft damp cloth followed by a dry cloth. Do not use bleach or any abrasive cleaner.

We have taken great care to ensure that this product reaches you in perfect condition. However should any parts be damaged or missing please contact your point of purchase. This does not affect your statutory rights. In addition if you require replacement parts your point of purchase will be happy to assist.

Front Panel and End Panel Installations

When fitting a front and end panel it is recommended that the panels be joined together before fitting them to the bath. Depending on the size of the bath and the nature of the installation, there are various ways of joining the corners together as described below.

For 1700x700 Baths

The panels can be joined using standard plastic jointing blocks or an additional softwood strip that is screwed to the back of the panels. The panels are designed so that the end panel sits behind the front panel. These are NOT supplied with the panel.

Once the front and end panels are joined together the assembly can be secured at each "loose" end to the softwood strips.

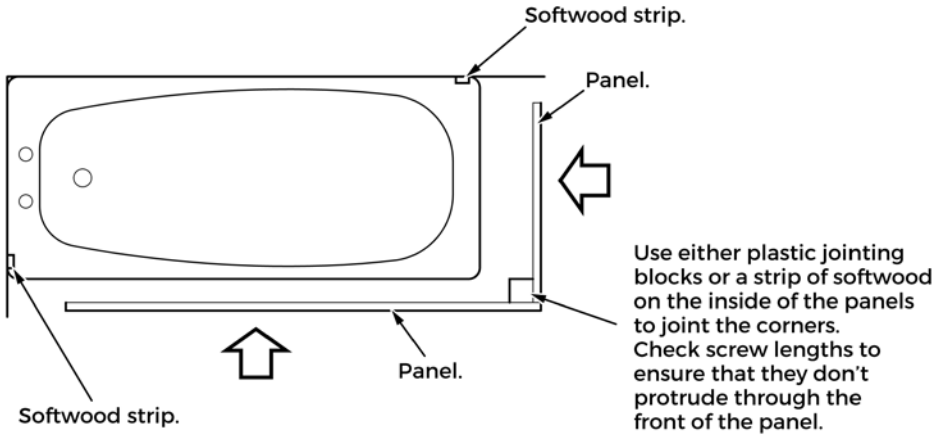

Note: Plastic jointing blocks, corner posts, softwood strips and screws are not supplied.

Note: It will be necessary to shorten the front panel plinth so that the end panel can be accommodated.

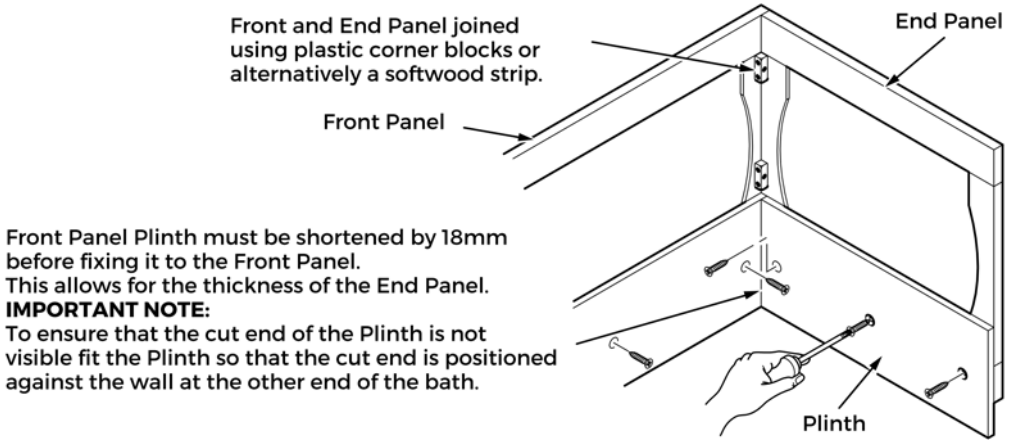

Fixing & fittings supplied

End Panel - 3 screws.
Front Panel - 5 screws.

Tools required (not supplied)

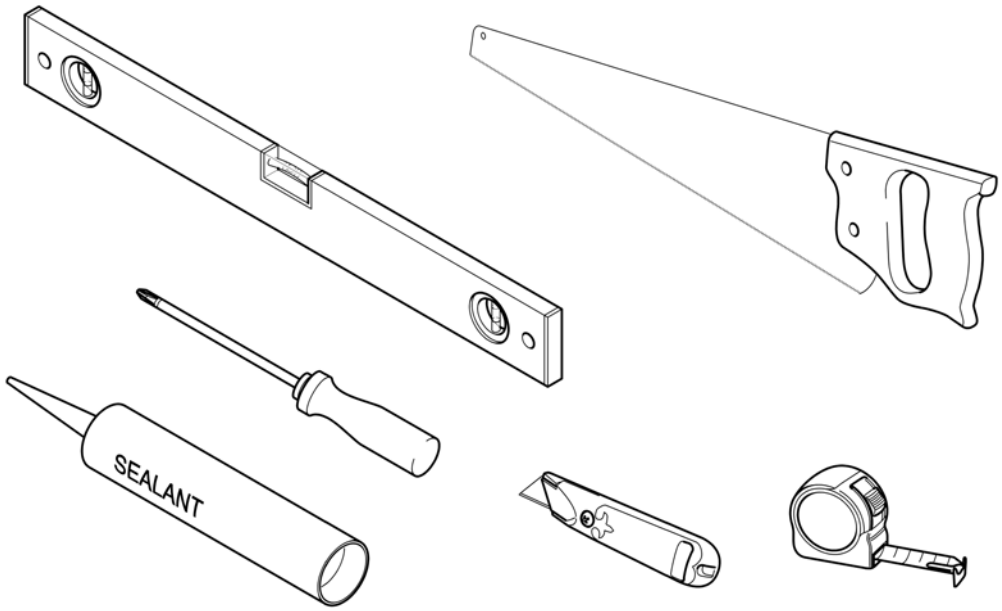

ADJUSTING THE HEIGHT OF THE PANEL

The plinth is fixed to the back of the Front Panel using 5 wood screws, and the back of the End Panel using 3 wood screws. Make sure that the screws are positioned so that they screw into the bottom of the panel.

To work out the plinth position, simply measure the height of the bath at both ends and fix the plinth to the panel accordingly. Ensure the bath is level before measuring the required height. If the bath is level but the height at each end is different then the floor may not be level.
Simply adjust the position of the plinth to allow for any slope in the floor.

CUTTING THE PANEL TO AVOID OBSTRUCTIONS

Wherever possible, cutting into the panel should be avoided. This is because the panel is polyurethane or melamine faced chipboard finished to give maximum water protection. If the seal is broken by cutting the panel, it will ultimately weaken the panel's defence against water. If cuts in the panel are essential (to allow for pipe runs etc.) then the following steps must be taken:

- To prevent surface splinters, score the section to be cut with a sharp knife before cuting.
- Use a fine tooth, cross cut saw.
- It is essential that all freshly exposed timber is re-sealed using PVA Glue. Failure to re-seal timber may result in water penetrating the panel and damaging it. Failure to re-seal will also invalidate the product warranty.
- If the cut area is in a location that is likely to be regularly splashed then it should also be sealed with silicone.

It is possible that some types of bath have obstructions that prevent the panel from sitting flush with the rim of the bath. The result is that the top edge of the panel protrudes from the rim of the bath by as much as 10mm. This is not the fault of the bath panel. It is perfectly acceptable for the panel to be fitted in this way, but should it be visually unacceptable then the only course of action is to remove the obstruction or cut the panel in such a way as to avoid it.

Two examples of typical causes are:

A) Plastic baths with a steel cradle foot system.

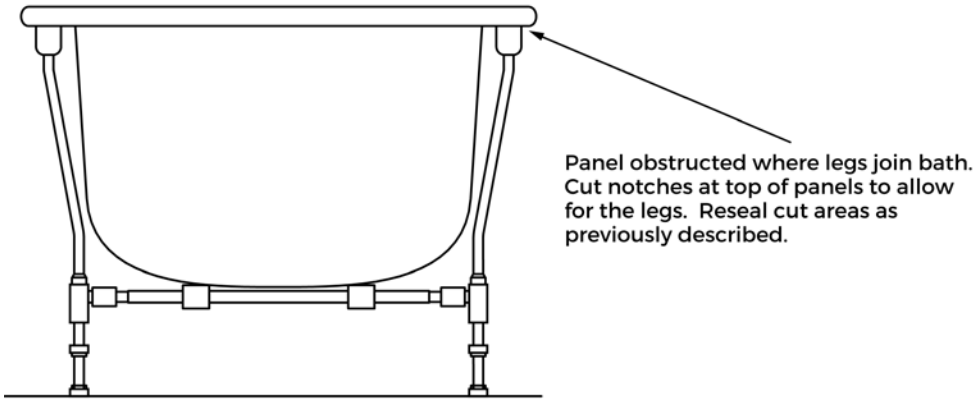

B) Some baths have an obstruction running the entire length of the bath under the rim. (Usually a chipboard strengthener.) The only course of action is to machine a rebate along the entire length of the panel. This should only be attempted using power tools as a hand plane will exert too much force on the panel's frame construction. The following guidelines should also be followed:

- The rebate is no more than 10mm in depth
- The rebate is no more than 50mm in height
- The cut area is re-sealed with at least 2 coats of PVA Glue
- The rim of the bath and the top edge of the panel are sealed with silicone sealant to prevent water seeping onto the rebated area

SUPPORTING THE PANEL IN THE CORRECT POSITION

Note: The panels are not intended as a means to support the bath. It is assumed that the bath is installed in a correct and stable manner prior to panel installation.

The recommended method of supporting the panel is to use softwood strips that are fixed to the walls at either end of the bath. A complete softwood frame should not be necessary as the panel is stable and rigid enough already.

The dimensions of the softwood strips can vary according to the sizes readily available and the amount of space you have under the bath. A section of 19mm x 38mm should be sufficient. Make sure the softwood strips are fastened securely to the walls using at least 2 screws. These are NOT supplied with the Panel.

Depending on the type of installation (Front Panel only, Front and End Panel etc.), there are different ways of fitting your panels, as listed below.

Front Panel Only Installations
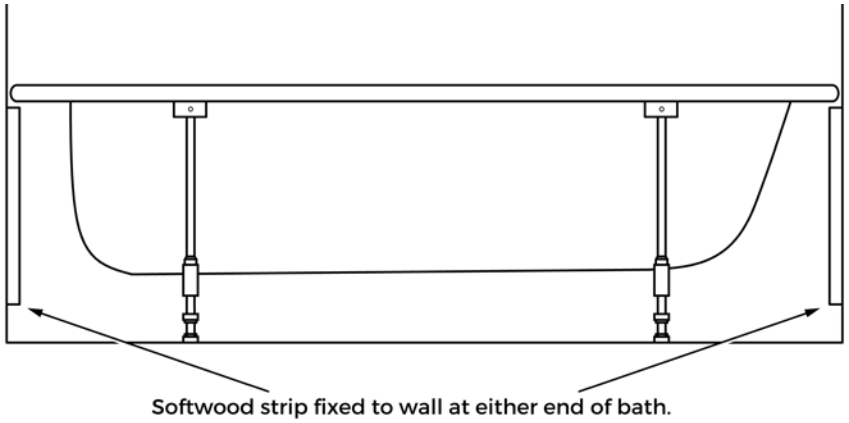
If only a front panel is to be fitted, you simply secure the softwood strips at either end of the bath . If it is necessary to trim the panel to length you must re-seal the timber as described above.