TECHNICAL DATA SHEET

Product Code: 912529

Product Description: Concept Freedom back-to-wall raised height WC pan

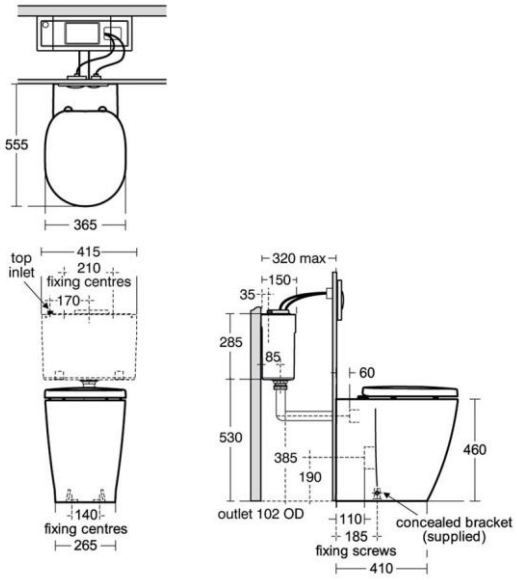

Product Specification

Material: Vitreous China

Weight: 32.70Kg

Additional Information

- Domestic and commercial use
- Part of the extensive Concept suite
- Slow close seat option

'The information contained within this specification sheet is believed to be correct and complete at the time of creation. All photographs / drawings are as a guide only and do not necessarily represent the products available. Travis Perkins PLC reserves the right to change product details and price without prior notice. E&OE.' [04/2013]